E-RAD BLU 4000

Part Number: 200415

675 - 4.500 Nm

MAX SPEED 8 RPM

SERVO CONTROLLED

DATA LOGGING

TORQUE + ANGLE FUNCTION

SMART SOCKET CONNECTIVITY

SPECIFICATIONS

- ***TORQUE RANGE:*** 675 - 4.500 Nm
- ***SPEED:*** 8 RPM
- ***WEIGHT:*** 10,6 Kg, excluding reaction arm and impact socket
- ***SQUARE DRIVE:*** 1,5 inch square drive
- ***NOISE LEVEL:*** Maximum 75 dB
- ***PASSWORD PROTECTION:*** Three user levels
- ***LED INDICATOR LIGHTS:*** Pass/Fail
- ***CUSTOM PROGRAMMABLE***
- ***REPEATABILITY ON SAME JOINT*:** +/- 2%.

** Test results from certified calibration lab*

SUITABLE REACTION ARMS

Standard

PN: 17748

Deep socket

PN: 11534

Double ended

PN: 11533

Blank

PN: 11530

Double ended blank

PN: 11532

Safety sliding

On request

DIMENSIONS IN MM

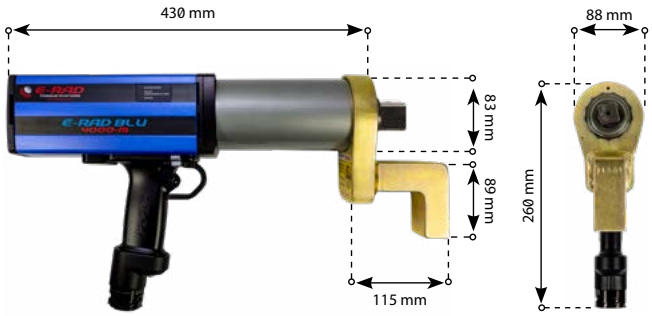

TOOL KIT INCLUDING

- *E-RAD BLU 4000*
- *Standard reaction arm* **(PN: 17748)**
- *Two retaining rings* **(PN: 11350)**
- *Control box 220V*
- *Controller cable 4,5 mtr*
- *Data logging software*
- *Calibration certificate*
- *Usermanual*
- *Safety instructions on USB stick*
- *Weatherproof storage case.*

IMPERIAL VERSION

- ***MODEL:*** E-RAD BLU 3000
- ***PART NUMBER:*** n/a
- ***TORQUE RANGE:*** 500 - 3300 ft/lbs
- ***WEIGHT:*** 23.5 lbs.

Non Impacting | Safe & Reliable | Bluetooth data exchange | Software managed | Torque + angle function | According to European standards | Accredited ISO/IEC 17025

2020 - V. 02. If there are any doubts or questions about the information in this document, please contact RAD B.V.
The information in this document is subject to change without notice, no rights may be derived from its content.

ELECTRONIC SERIES
Accessoires

Swivelling tool handle & hanger

Product number	Suitable for
19827	E-RAD BLU 950
19825	E-RAD BLU 2000
19823	E-RAD BLU 3400
19821	E-RAD BLU 4000
19819	E-RAD BLU 8000
22931	E-RAD BLU 10K
26634	E-RAD BLU 15K

CX Offset Gearboxes

Product number	Gearbox
27978	Hex 50 mm
28540	Hex 65 mm

Product number	Suitable for	Gearbox
16155	E-RAD BLU 950(-S)	27978
26994	E-RAD BLU 2000	27978
13034	E-RAD BLU 3400(-S)	27978
28532	E-RAD BLU 3400(-S)	28540

Hex reducer on request.

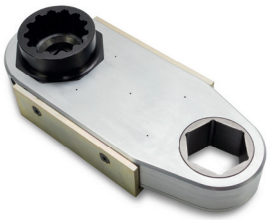

Impact Sockets

Product number	Hex size	Square drive	Bolt size	Suitable for
200189	22MM	3/4″	M14	E-RAD BLU 950
200190	24MM	3/4″	M16	E-RAD BLU 950
200210	27MM	3/4″	M18	E-RAD BLU 950
200211	30MM	3/4″	M20	E-RAD BLU 950
200212	32MM	3/4″	M22	E-RAD BLU 950
200004	36MM	3/4″	M24	E-RAD BLU 950
200215	38MM	3/4″	M24	E-RAD BLU 950
200005	41MM	3/4″	M27	E-RAD BLU 950
200227	36MM	1″	M24	E-RAD BLU 2000, 3400 & 4000
200229	41MM	1″	M27	E-RAD BLU 2000, 3400 & 4000
200230	46MM	1″	M30	E-RAD BLU 2000, 3400 & 4000
200007	50MM	1″	M33	E-RAD BLU 2000, 3400 & 4000
200008	55MM	1″	M36	E-RAD BLU 2000, 3400 & 4000
200009	60MM	1″	M39	E-RAD BLU 3400 & 4000
200238	55MM	1,5″	M36	E-RAD BLU 8000
200297	60MM	1,5″	M39	E-RAD BLU 8000 & 10K
300052	70MM	1,5″	M45	E-RAD BLU 8000, 10K &15K
200197	75MM	1,5″	M48	E-RAD BLU 8000, 10K &15K
200241	80MM	1,5″	M49	E-RAD BLU 8000, 10K &15K
200298	90MM	1,5″	M52	E-RAD BLU 10K &15K

Nose extension series

Product number	Model	Length
14195	E-RAD BLU 950(-S)	324 mm
14200	E-RAD BLU 950(-S)	400 mm
14205	E-RAD BLU 950(-S)	476 mm
18185	E-RAD BLU 2000	349 mm
19058	E-RAD BLU 2000	400 mm
19059	E-RAD BLU 2000	476 mm
12096	E-RAD BLU 3400(-S)	330 mm
12061	E-RAD BLU 3400(-S)	406 mm
12097	E-RAD BLU 3400(-S)	470 mm
11750	E-RAD BLU 4000(-S)	318 mm
11751	E-RAD BLU 4000(-S)	394 mm
11752	E-RAD BLU 4000(-S)	470 mm

E-RAD Two Handed Safety Switch

Product number	Model
28795	E-RAD 4000, 8000, 10K & 15K(-S)
28797	E-RAD 950, 2000, & 3400(-S)

Trigger guard for E-RAD

Product number	Model
21889	E-RAD safety trigger guard

 If there are any doubts or questions about the information in this document, please contact RAD B.V.
The information in this document is subject to change without notice, no rights may be derived from its content.