14 GX

Part Number: **13549**

275 - 1.400 Nm
MAX SPEED 20,0 RPM
LIGHTWEIGHT FRL UNIT
FAST AND LIGHT
DOUBLE SAFETY TRIGGER

OPTION

SPECIFICATIONS

- ***TORQUE RANGE:*** 275 - 1.400 Nm
- ***SPEED:*** 20,0 RPM
- ***WEIGHT:*** 3,8 Kg, excluding reaction arm and impact socket
- ***SQUARE DRIVE:*** ¾ inch square drive
- ***NOISE LEVEL:*** 80 dB
- ***REPEATABILITY ON SAME JOINT*:** +/- 3%.

** Test results from RAD's certified calibration lab*

SUITABLE REACTION ARMS

Standard
PN: 19260

Deep socket
PN: 13367

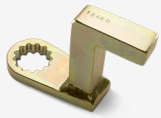

Double ended
PN: 13368

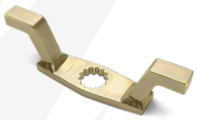

Blank
PN: 13364

Double ended blank
PN: 13365

Safety sliding
PN: 25243

DIMENSIONS IN MM

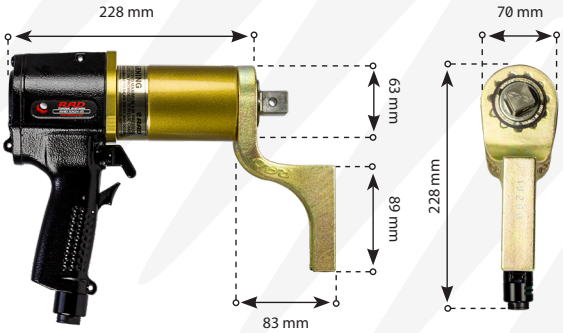

TOOL KIT INCLUDING

- *14 GX*
- *Standard reaction arm* **(PN: 19260)**
- *Two retaining rings* **(PN: 12733)**
- *Flow Regulation Lubrication unit 2 Kg*
- *Airmotor oil for the FRL unit*
- *3.6 meter hose*
- *Storage case*
- *User manual*
- *Calibration certificate*
- *Safety instruction on USB stick.*

IMPERIAL VERSION

- ***MODEL:*** 10 GX
- ***PART NUMBER:*** 12818
- ***TORQUE RANGE:*** 200 - 1000 ft/lbs
- ***WEIGHT:*** 8.0 lbs.

Non Impacting | Safe & Reliable | EX certification (Optional) | According to European standards

2025 - V.01 Disclaimer: The information in this document is subject to change without notice. While endeavored to keep the information up to date and correct, no rights can be derived. If there are any doubts or questions, please contact Radial Torque Tools B.V..

RAD TORQUE SYSTEMS

WWW.RADIALTORQUE.EU

Pneumatic SERIES

Accessories

Double Safety Button

Prod. Nr.	
19827	RAD 475 SL, 10 & 14 GX
19825	RAD 20 DX
19823	RAD 34 GX
26751	RAD 40 DX
19821	RAD 46 GX
26674	RAD 70 DX
19819	RAD 80 DX
22931	RAD 110 DX
19817	RAD 115 GX
26634	RAD 150 DX

Double Safety Button

Prod. Nr.	
200142	100 SL, 275 SL, 475 SL(-2), 10 GX, 14 GX(-2), 20 DX(-2)
200143	34 GX(-2), 40 DX(-2)
200144	46 GX, 80 DX, 110 DX, 150 DX

Impact Sockets

Prod. Nr.	Hex size	Square drive	Bolt size	Suitable for
200187	17MM	3/4	M10	100 SL, 275 SL
200219	19MM	3/4	M12	100 SL, 275 SL & 475 SL(-2)
200189	22MM	3/4	M14	100 SL, 275 SL & 475 SL(-2)
200190	24MM	3/4	M16	100 SL, 275 SL, 475 SL(-2), 10 GX & 14 GX(-2)
200210	27MM	3/4	M18	275 SL, 475 SL, 10 GX & 14 GX(-2)
200211	30MM	3/4	M20	475 SL(-2), 10 GX & 14 GX(-2)
200212	32MM	3/4	M22	475 SL(-2), 10 GX & 14 GX(-2)
200004	36MM	3/4	M24	10 GX & 14 GX(-2)
200215	38MM	3/4	M24	10 GX & 14 GX(-2)
200005	41MM	3/4	M27	10 GX & 14 GX(-2)
200006	46MM	3/4	M30	14 GX(-2)
200216	50MM	3/4	M33	14 GX(-2)
200227	36MM	1	M24	20 DX(-2), 34GX(-2) & 40 DX(-2)
200229	41MM	1	M27	20 DX(-2), 34GX(-2) & 40 DX(-2)
200230	46MM	1	M30	20 DX(-2), 34GX(-2) & 40 DX(-2)
200007	50MM	1	M33	20 DX(-2), 34GX(-2) & 40 DX(-2)
200008	55MM	1	M36	20 DX(-2), 34GX(-2) & 40 DX(-2)
200009	60MM	1	M39	34GX(-2), 40 DX(-2) & 46 GX
200231	70MM	1	M45	46 GX
200237	50MM	1,5	M33	70 DX
200238	55MM	1,5	M36	70 DX & 80 DX
200297	60MM	1,5	M39	70 DX, 80 DX & 110 DX
300052	70MM	1,5	M45	70 DX, 80 DX, 110 DX & 150 DX
200197	75MM	1,5	M48	70 DX, 80 DX, 110 DX & 150 DX
200241	80MM	1,5	M49	70 DX, 80 DX, 110 DX & 150 DX
200298	90MM	1,5	M52	70 DX, 80 DX, 110 DX & 150 DX
300053	100MM	1,5	M68	80 DX, 110 DX & 150 DX
200209	110MM	1,5	M72	110 DX & 150 DX

CX Offset Gearboxes

Prod. Nr.	Model	Max output	Ratio
27978	Hex 50 mm	3400 Nm	1:1
28540	Hex 65 mm	5000 Nm	1:1

Prod. Nr.	Suitable for	Gearbox
11537	RAD 100 SL, 275 SL & 475 SL	27978
16155	RAD 10 GX & 14 GX	27978
26994	RAD 20 GX(-2)	27978
13034	RAD 34 GX(-2)	27978
27853	RAD 40 DX(-2)	27978
28532	RAD 34 GX(-2)	28540
28531	RAD 40 DX(-2)	28540

Hex reducer on request.

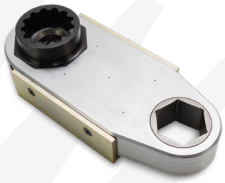

HX Offset Gearboxes

Prod. Nr.	
24404	HX Offset Gearbox - 55 mm AF
22541	HX Offset Gearbox - 65 mm AF
16550	HX Offset Gearbox - 80 mm AF

Other sizes HX Offset gearboxes are available on request.

Nose extension series

Prod. Nr.	Model	Reaction arm	Length
14195	14 GX(-2)	11842	324 mm
14200	14 GX(-2)	11842	400 mm
14205	14 GX(-2)	11842	476 mm
18185	20 DX(-2)	19772	349 mm
19058	20 DX(-2)	19772	400 mm
19059	20 DX(-2)	19772	476 mm
12096	34 GX(-2)	N/A	330 mm
12061	34 GX(-2)	N/A	406 mm
12097	34 GX(-2)	N/A	470 mm
27641	40 DX(-2)	13515	305 mm
27643	40 DX(-2)	13515	381 mm
27651	40 DX(-2)	13515	457 mm
11750	46 GX(-2)	N/A	318 mm
11751	46 GX(-2)	N/A	394 mm
11752	46 GX(-2)	N/A	470 mm

ATEX

Prod. Nr.	Model
3000105	ATEX

2025 - V.01 Disclaimer: The information in this document is subject to change without notice. While endeavored to keep the information up to date and correct, no rights can be derived. If there are any doubts or questions, please contact Radial Torque Tools B.V..

RAD TORQUE SYSTEMS

WWW.RADIALTORQUE.EU